C5.01 Erosion and Sediment Control Notes (common to both options)

STANDARDS AND SPECIFICATIONS FOR DUST CONTROL

1. THE CONTRACTOR SHALL CONDUCT OPERATIONS AND MAINTAIN THE PROJECT SITE SO AS TO MINIMIZE THE CREATION AND DISPERSION OF DUST. DUST CONTROL SHALL BE USED THROUGHOUT THE WORK AT THE SITE.

2. THE CONTRACTOR MUST PROVDE CLEAN WATER, FREE FROM SALT, OIL AND OTHER DELETERIOUS MATERIAL TO BE USED FOR ON–SITE DUST CONTROL.

3. THE CONTRACTOR SHALL SUPPLY WATER SPRAYING EQUIPMENT CAPABLE OF ACCESSING ALL WORK AREAS.

4. THE CONTRACTOR SHALL IMPLEMENT STRICT DUST CONTROL MEASURES DURING ACTIVE CONSTRUCTION PERIODS ON–SITE. THESE CONTROL MEASURES WILL GENERALLY CONSIST OF WATER APPLICATIONS THAT SHALL BE APPLIED A MINIMUM OF ONCE PER DAY DURING DRY WEATHER OR MORE OFTEN AS REQUIRED TO PREVENT DUST EMISSIONS.

5. FOR WATER APPLICATION TO UNDISTURBED SOIL SURFACES, THE CONTRACTOR SHALL:

A. APPLY WATER WITH EQUIPMENT CONSISTING OF TANK, SPRAY BAR, PUMP WITH DISCHARGE PRESSURE GAUGE.

B. ARRANGE SPRAY BAR HEIGHT, NOZZLE SPACING AND SPRAY PATTERN TO PROVIDE COMPLETE COVERAGE OF GROUND WITH WATER.

C. DISPERSE WATER THROUGH NOZZLES ON SPRAY BAR AT 20 PSI (137.8kPa), MINIMUM. KEEP AREAS DAMP WITHOUT CREATING NUISANCE CONDITIONS SUCH AS PONDING.

6. FOR WATER APPLICATION TO SOIL SURFACES DURING DEMOLITION AND/OR EXCAVATION, THE CONTRACTOR SHALL:

A. APPLY WATER WITH EQUIPMENT CONSISTING OF A TANK, PUMP WITH DISCHARGE GAUGE, HOSES AND MIST NOZZLES.

B. LOCATE TANK AND SPRAYING EQUIPMENT SO THAT THE ENTIRE EXCAVATION AREA CAN BE MISTED WITHOUT INTERFERING WITH DEMOLITION AND/OR EXCAVATION EQUIPMENT OR OPERATIONS. KEEP AREAS DAMP WITHOUT CREATING NUISANCE CONDITIONS SUCH AS PONDING.

C. APPLY WATER SPRAY IN A MANNER TO PREVENT MOVEMENT OF SPRAY BEYOND THE SITE BOUNDARIES.

DISTRICT OF COLUMBIA STANDARD SEDIMENT CONTROL NOTES

1. ALL SEDIMENT AND EROSION CONTROL METHODS SHALL BE INSTALLED BEFORE THE START OF AN EXCAVATION AND/OR CONSTRUCTION AS PER STANDARDS AND SPECIFICATIONS FOR SOIL EROSION AND SEDIMENT CONTROL IN THE DISTRICT OF COLUMBIA. IF AN ON–SITE INSPECTION REVEALS FURTHER EROSION CONTROL MEASURES ARE NECESSARY THE SAME SHALL BE PROVIDED.

2. ALL DEBRIS TO BE REMOVED FROM SITE.

3. ALLEY AND/OR STREETS SHALL BE SWEPT CLEAN AT ALL TIMES DURING EXCAVATION AND CONSTRUCTION.

4. ALL CATCH BASINS AND AREA DRAINS SHALL BE PROTECTED DURING EXCAVATION AND CONSTRUCTION.

5. IF ANY CATCH BASIN OR DRAIN BECOMES CLOGGED AS A RESULT OF EXCAVATION OR CONSTRUCTION, THE CONTRACTOR SHALL BE RESPONSIBLE FOR ITS CLEANING.

6. WHEN A SEDIMENT TRAP/SEDIMENT TANK HAS REACHED 6776 CAPACITY, CLEAN OUT OF SAME IS REQUIRED.

7. ANY STOCKPILING, REGARDLESS OF LOCATION ON THE SITE, SHALL BE STABILIZED WITHIN 20 DAYS AFTER IS ESTABLISHMENT AND FOR THE DURATION OF THE PROJECT.

37.0 STANDARDS AND SPECIFICATIONS FOR LAND GRADING

DEFINITION: RESHAPING OF THE EXISTING LAND SURFACE IN ACCORDANCE WITH A PLAN AS DETERMINED BY ENGINEERING SURVEY AND LAYOUT.

PURPOSE: THE PURPOSE OF A LAND GRADING SPECIFICATIONS IS TO PROVIDE FOR EROSION CONTROL AND VEGETATIVE ESTABLISHMENT ON THOSE AREAS WHERE THE EXISTING LAND SURFACE IS TO BE RESHAPED BY GRADING ACCORDING TO A PLAN.

DESIGN CRITERIA: THE GRADING PLAN SHOULD BE BASED UPON THE INCORPORATION OF BUILDING DESIGNS AND STREET LAYOUTS THAT FIT AND UTILIZE EXISTING TOPOGRAPHY AND DESIRABLE NATURAL SURROUNDINGS TO AVOID EXTREME GRADE MODIFICATIONS. INFORMATION SUBMITTED MUST PROVIDE SUFFICIENT TOPOGRAPHIC SURVEYS AND SOIL INVESTIGATIONS TO DETERMINE LIMITATIONS THAT MUST BE IMPOSED UPON THE GRADING OPERATION RELATED TO SLOPE STABILITY, EFFECT ON ADJACENT PROPERTIES, AND DRAINAGE PATTERNS, MEASURES FOR DRAINAGE AND WATER REMOVAL, AND VEGETATIVE TREATMENT, ETC.

THE PLAN MUST SHOW EXISTING AND PROPOSED CONTOURS OF THE AREA(S) TO BE GRADED. THE PLAN SHALL ALSO INCLUDE PRACTICES FOR EROSION CONTROL, SLOPE STABILIZATION, SAFE DISPOSAL OF RUNOFF WATER AND DRAINAGE, SUCH AS WATERWAYS, LINED DITCHES, REVERSE SLOPE BENCHES (INCLUDE GRADE AND CROSS–SECTION), GRADE STABILIZATION STRUCTURES, RETAINING WALLS, AND SURFACE AND SUBSURFACE DRAINS. THE PLAN SHALL ALSO INCLUDE PHASING OF THESE PRACTICES. THE FOLLOWING SHALL BE INCORPORATED INTO THE PLAN:

1. PROVISIONS SHALL BE MADE TO SAFELY CONDUCT SURFACE RUNOFF TO STORM DRAINS, PROTECTED OUTLETS OR TO STABILIZE WATER COURSES TO INSURE THAT SURFACE RUNOFF WILL NOT DAMAGE SLOPES OR OTHER GRADED AREAS.

2 CUT AND FILL SLOPES THAT ARE TO BE STABILIZED WITH GRASSES SHALL NOT BE STEEPER THAN 2:1. (WHERE THE SLOPE IS TO BE MOWED THE SLOPE SHOULD BE STEEPER THAN 3:1, 4:1 IS PREFERRED BECAUSE OF SAFETY FACTORS RELATED TO MOWING STEEP SLOPES.) SLOPES EXCEEDING 2:1 SHALL REQUIRE SPECIAL DESIGN AND STABILIZATION CONSIDERATIONS THAT SHALL BE ADEQUATELY SHOWN ON THE PLANS.

3. REVERSE BENCHES SHALL BE PROVIDED WHENEVER THE VERTICAL INTERVAL (HEIGHT) OF ANY 21 SLOPE EXCEEDS 20 FEET: FOR 3:1 SLOPE IS SHALL BE INCREASED TO 30 FEET AND FOR 4:1 TO 40 FEET. BENCHES SHALL BE LOCATED TO DIVIDE THE SLOPE FACE AS EQUALLY AS POSSIBLE AND SHALL CONVEY THE WATER TO A STABLE OUTLET. SOILS, SEEPS, ROCK OUTCROPS, ETC., SHALL ALSO BE TAKEN INTO CONSIDERATION WHEN DESIGNING BENCHES.

4. SURFACE WATER SHALL BE DIVERTED FROM THE FACE OF ALL CUT AND/OR FILL SLOPES BY THE USE OF EARTH DICES, DITCHES, AND SWALES OR CONVEYED DOWNSLOPE BY THE USE OF A DESIGNED STRUCTURE, EXCEPT WHERE:

A. THE FACE OF THE SLOPE IS OR SHALL BE STABILIZED AND THE FACE OF ALL GRADED SLOPES SHALL BE PROTECTED FROM SURFACE RUNOFF UNTIL THEY ARE STABILIZED.

37.0 STANDARDS AND SPECIFICATIONS FOR LAND GRADING CONT.

B. THE FACE OF THE SLOPE SHALL NOT BE SUBJECT TO ANY CONCENTRATE FLOWS OF SURFACE WATER SUCH AS FROM NATURAL DRAINAGEWAYS, GRADED SWALES, DOWNSPOUTS, ETC.

C. THE FACE OF THE SLOPE WILL BE PROTECTED BY SPECIAL EROSION CONTROL MATERIALS TO INCLUDED, BUT NOT LIMITED TO: APPROVED VEGETATIVE STABILIZATION PRACTICES (SEE SECTION G), RIP–RAP OR OTHER APPROVED STABILIZATIONS METHODS.

5. CUT SLOPES OCCURRING IN RIFABLE ROCK SHALL BE SERRATED AS SHOWN W DETAIL 70, SERRATED SLOPES ON THE FOLLOWING DIAGRAM. THESE SERRATIONS SHALL BE MADE WITH CONVENTIONAL EQUIPMENT AS THE EXCAVATION IS MADE EACH STEP OR SERRATION SHALL BE CONSTRUCTED ON THE CONTOUR AND WILL HAVE STEPS CUT AT NOMINAL 2–FOOT INTERVALS WITH NOMINAL 3–FOOT HORIZONTAL SHELVES. THESE STEPS WILL VARY DEPENDING ON THE SLOPE RATIO OR THE CUT SLOPE THE NOMINAL SLOPE LOHE IS 1:5:1. THESE STEPS WILL WEATHER AND ACT TO HOLD MOISTURE, LIME, FERTILIZER, AND SEED, THUS PRODUCING A MUCH QUICKER AND LONGER LIVED VEGETATIVE COVER AND BETTER SLOPE STABILIZATION. OVERLAND FLOW SHALL BE DIVERTED FROM THE TOP OF ALL SERRATED CUT SLOPES AND CARRIED TO A SUITABLE OUTLET.

6. SUBSURFACE DRAINAGE SHALL BE PROVIDED WHERE NECESSARY TO INTERCEPT SEEPAGE THAT WOULD OTHERWISE ADVERSELY AFFECT SLOPE STABILITY OR CREATE EXCESSIVELY WET SITE CONDITIONS.

7. SLOPES SHALL NOT BE CREATED SO CLOSE TO PROPERTY LINES AS TO ENDANGER ADJOINING PROPERTIES WITHOUT ADEQUATELY PROTECTING SUCH PROPERTIES AGAINST SEDIMENTATION, EROSION, SLIPPAGE. SETTLEMENT, SUBSIDENCE OR OTHER RELATED DAMAGES.

8. FILL MATERIAL SHALL BE FREE OF SNOW, ICE, FROZEN MATERIALS, TRASH, BRICK, CLAY LUMPS, HAZARDOUS MATERIAL, BROKEN CONCRETE, TREE ROOTS, SOD, ASHES, CINDERS, GLASS, PLASTER, ORGANIC MATTER, BRUSH, LOGS, STUMPS, BUILDING DEBRIS. AND ANY OTHER FOREIGN MATERIAL IT SHOULD BE FREE OF STONES OVER 2 INCHES IN DIAMETER WHERE COMPACTED BY HAND OR MECHANICAL TAMPERS OR OVER 8 INCHES IN DIAMETER WHERE COMPACTED BY ROLLERS OR OTHER EQUIPMENT. FROZEN MATERIAL SHALL BE PLACED IN THE FILL NOR SHALL THE FILL MATERIAL BE PLACED ON A FROZEN FOUNDATION.

9. STOCKPILES, BORROW AREAS, AND SPOIL SHALL BE SHOWN ON THE PLANS AND SHALL BE SUBJECT TO THE PROVISIONS OF THIS STANDARD AND SPECIFICATION.

10. ALL DISTURBED AREAS SHALL BE STRUCTURALLY OR VEGETATIVELY IN COMPLIANCE WITH 42.0 STANDARDS AND SPECIFICATIONS FOR VEGETATIVE STABILIZATION.

38.0 STANDARDS AND SPECIFICATIONS FOR TOPSOIL

DEFINITION: PLACEMENT OF TOPSOIL OVER PREPARED SUBSOIL PRIOR TO ESTABLISHMENT OF PERMANENT VEGETATION.

PURPOSE: TO PROVIDE A SUITABLE SOIL MEDIUM FOR VEGETATIVE GROWTH. SOILS OF CONCERN HAVE LOW MOISTURE CONTENT, LOW NUTRIENT LEVELS, LOW PH, MATERIALS TOXIC TO PLANTS, AND/OR UNACCEPTABLE SOIL GRADATION.

CONDITIONS WHERE PRACTICE APPLIES

I. THIS PRACTICE IS LIMITED TO AREAS HAVING 2:1 OR FLATTER SLOPES WHERE:

A. THE TEXTURE OF THE EXPOSED SUBSOIL/PARENT MATERIAL IS NOT ADEQUATE TO PRODUCE VEGETATIVE GROWTH.

B. THE SOIL MATERIAL IS SO SHALLOW THAT THE ROOTING ZONE IS NOT DEEP ENOUGH TO SUPPORT PLANTS OR FURNISH CONTINUING SUPPLIES OF MOISTURE AND PLANT NUTRIENTS.

C. THE ORIGINAL SOIL TO BE VEGETATED CONTAINS MATERIAL TOXIC TO PLANT GROWTH.

D. THE SOIL IS SO ACIDIC THAT TREATMENT WITH LIMESTONE IS NOT FEASIBLE.

II. FOR THE PURPOSE OF THESE STANDARDS AND SPECIFICATIONS, AREAS HAVING SLOPES STEEPER THAW 2:1 REQUIRE SPECIAL CONSIDERATION AND DESIGN FOR ADEQUATE STABILIZATION. AREAS HAVING SLOPES STEEPER THAN 2:1 SHALL HAVE THE APPROPRIATE STABILIZATION SHOWN ON THE PLANS.

CONSTRUCTION AND MATERIAL SPECIFICATIONS

II. TOPSOIL SALVAGED FROM THE EXISTING SITE MAY BE USED PROVIDED THAT IT MEETS THE STANDARDS AS SET FORTH IN THESE SPECIFICATIONS. TYPICALLY, THE DEPTH OF THE TOPSOIL TO BE SALVAGED FOR A GVEN SOIL TYPE CAN BE FOUND IN THE REPRESENTATIVE SOIL PROFILE SECTION IN THE SOIL SURVEY PUBLISHED IN THE NRCS DISTRICT OF COLUMBIA SOIL SURVEY MANUAL

A. TOPSOIL SPECIFICATIONS – SOIL TO BE USED AS TOPSOIL MUST MEET THE FOLLOWING: A TOPSOIL SHALL BE A LOAM, SANDY LOAM. CLAY LOAM, SILT LOAM, SANDY CLAY LOAM, LOAMY SAND. OTHER SOILS MAY BE USED IF RECOMMENDED BY AN AGRONOMIST OR SOIL SCIENTIST AND APPROVED BY THE WATERSHED PROTECTION DIVISION. REGARDLESS, TOPSOIL SHALL NOT BE A MIXTURE OF CONTRASTING TEXTURED SUBSOIL AND SHALL CONTAIN LESS THAN 5X BY VOLUME OF CINDERS, STONES, SLAG, COARSE FRAGMENTS, GRAVEL, STICKS, ROOTS, TRASH, OR OTHER MATERIALS LARGER THAN 1 1/2 INCHES IN DIAMETER.

B. TOPSOIL MUST BE FREE OF PLANT OR PLAN PARTS SUCH AS BERMUDA GRASS, QUACKGRASS. JOHNSONGRASS, NUTSEDGE, POISON IVY, THISTLE, AND OTHER POISONOUS PLANTS OR OTHERS AS SPECIFIED.

C. WHERE SUBSOIL IS EITHER HIGHLY ACIDIC OR COMPOSED HEAVY CLAYS, GROUND LIMESTONE SHALL BE SPREAD AT THE RATE OF 4–8 TONS/ACRE (200–400 LBS/1,000 SF) PRIOR TO THE PLACEMENT OF TOPSOIL. LIME SHALL BE DISTRIBUTED UNIFORMLY OVER DESIGNATED AREAS AND WORKED INTO THE SOIL IN CONJUNCTION WITH TILLAGE OPERATIONS AS DESCRIBED W THE FOLLOWING PROCEDURES.

III FOR SITES HAVING DISTURBED AREAS UNDER 5 ACRES:

PLACE TOPSOIL (IF REQUIRED) AND APPLY SOIL AMENDMENTS AS SPECIFIED IN 42.0 VEGETATIVE STABILIZATION – SECTION I – VEGETATIVE STABILIZATION METHOD AND MATERIALS.

IV. FOR SITES HAVING DISTURBED AREAS OVER 5 ACRES:

A ON SOIL MEETING TOPSOIL SPECIFICATIONS, OBTAIN TEST RESULTS DICTATING FERTILIZER AND LIME AMENDMENTS REQUIRED TO BRING THE SOIL INTO COMPLIANCE WTH THE FOLLOWING:

I. PH FOR TOPSOIL SHALL BE BETWEEN 6.0 AND 7.5. IF THE TESTED SOIL DEMONSTRATES A PH OF LESS THAN 6.0, SUFFICIENT LIME SHALL BE PRESCRIBED TO RAISE THE PH TO 6.5 OR HIGHER.

II. ORGANIC CONTENT OF TOPSOIL SHALL NOT BE LESS THAN 1.5% BY WEIGHT.

III.TOPSOIL HAVING SOLUBLE SALT CONTENT GREATER THAN 500 PARTS PER MILLION SHALL NOT BE USED.

IV. NO SOD OR SEED SHALL BE PLACED ON SOIL WHICH HAS BEEN TREATED WITH SOIL STERILLANTS OR CHEMICALS USED FOR WEED CONTROL UNTIL SUFFICIENT TIME HAS ELAPSED (14 DAYS MINIMUM) TO PERMIT DISSIPATION OF PHYTO–TOXIC MATERIALS.

NOTE: TOPSOIL SUBSTITUTES OR AMENDMENTS, AS RECOMMENDED BY A QUALIFIED AGRONOMIST OR SOIL SCIENTIST AND APPROVED BY THE WATERSHED PROTECTION AGENCY, MAY BE USED IN–LIEU OF NATURAL TOPSOIL.

B. PLACE TOPSOIL (IF REQUIRED) AND APPLY SOIL AMENDMENTS AS SPECIFIED IN 42.0 VEGETATIVE STABILIZATION – SECTION I – VEGETATIVE STABILIZATION METHOD AND MATERIALS.

V. TOPSOIL APPLICATION

I. WHEN TOPSORNG, MAINTAIN NEEDED EROSION AND SEDIMENT CONTROL PRACTICES SUCH AS DIVERSIONS, GRADE STABILIZATION STRUCTURES, EARTH DIKES, SLOPE SILT FENCE AND SEDIMENT TRAPS AND BASINS.

II. GRADES N THE AREAS TO BE TOPSOIED, WHICH HAVE BEEN PREVIOUSLY ESTABLISHED SHALL BE MAINTAINED, ALBEIT 4–8" HIGHER N ELEVATION.

III.TOPSOIL SHALL BE UNIFORMLY DISTRIBUTED IN A 4–8" LAYER AND LIGHTLY COMPACTED TO A MINIMUM THICKNESS OF 4". SPREADING SHALL BE PERFORMED N SUCH A MANNER THAT SODDING OR SEEDING CAN PROCEED WITH A MINIMUM OF ADDITIONAL SOIL PREPARATION AND TILLAGE. ANY IRREGULARITIES IN THE SURFACE RESULTING FROM TOPSOILING OR OTHER OPERATIONS SHALL BE CORRECTED IN ORDER TO PREVENT THE FORMATION OF DEPRESSIONS OR WATER POCKETS.

IV. TOPSOIL SHALL BE PLACED WHILE THE TOPSOIL OR SUBSOIL IS N A FROZEN OR MUDDY CONDITION, WHEN THE SUBSOIL IS EXCESSIVELY WET OR N A CONDITION THAT MAY OTHERWISE BE DETRIMENTAL TO PROPER GRADING AND SEEDBED PREPARATION.

38.0 STANDARDS AND SPECIFICATIONS FOR TOPSOIL CONT.

VI. ALTERNATIVE FOR PERMANENT SEEDING –INSTEAD OF APPLYING THE FULL AMOUNTS OF LIME AND COMMERCIAL FERTILIZER, COMPOSTED SLUDGE AND AMENDMENTS MAY BE APPLIED AS SPECIFIED BELOW:

A. COMPOSTED SLUDGE MATERIAL FOR USE AS A SOIL CONDITIONER FOR SITES HAVING DISTURBED AREAS OVER 5 ACRES SHALL BE TESTED TO THE PRESCRIBED AMENDMENTS AND FOR SITES HAVING DISTURBED AREAS UNDER 5 ACRES SHALL CONFORM TO THE FOLLOWING REQUIREMENTS.

I. COMPOSTED SLUDGE SHALL BE SUPPLIED BY, OR ORIGINATE FROM, A PERSON OR PERSONS THAT ARE PERMITTED (AT THE TIME OF ACQUISITION OF THE COMPOST) BY EITHER THE STATE OF MARYLAND OR THE STATE OF VIRGINIA.

II. COMPOSTED SLUDGE SHALL CONTAIN AT LEAST 1.0% NITROGEN, 1.5% PHOSPHOROUS, AND 0.2% POTASSIUM, AND HAVE A PH OF 7.0 TO 8.0. IF COMPOST DOES NOT MEET THESE REQUIREMENTS, THE APPROPRIATE CONSTITUENTS MUST BE ADDED TO MEET THE REQUIREMENTS PRIOR TO USE

III. COMPOSTED SLUDGE SHALL BE APPLIED AT A RATE OF 1 TON/1,98U SF.

B. COMPOSTED SLUDGE SHALL BE AMENDED WITH A POTASSIUM FERTILIZER APPLIED AT THE RATE OF 4 LBS/1,000 SF AND 1/3 THE NORMAL LIME APPLICATION RATE REFERENCES: GUIDELINE SPECIFICATIONS, SOIL PREPARATION AND SODDING, MD–VA, PUB. #1, COOPERATIVE EXTENSIVE SERVICE, UNIVERSITY OF MARYLAND AND VIRGINIA POLYTECHNIC INSTITUTES, REVISED 1973.

42.0 STANDARDS AND SPECIFICATIONS FOR VEGETATIVE STABILIZATION

SECTION 1 – VEGETATIVE STABILIZATION METHODS AND MATERIALS A SITE PREPARATION

I. INSTALL EROSION AND SEDIMENT CONTROL STRUCTURES (EITHER TEMPORARY OR PERMANENT) SUCH AS DIVERSIONS, GRADE STABILIZATION STRUCTURES, BERMS, WATERWAYS. ON SEDIMENT CONTROL BASINS.

II. PERFORM ALL GRADING OPERATIONS AT RIGHT ANGLES TO THE SLOPE FINAL GRADING AND SHAPING NOT USUALLY NECESSARY FOR TEMPORARY SEEDING.

III. SCHEDULE REQUIRED SOIL TESTS TO DETERMINE SOIL AMENDMENT COMPOSITION AND APPLICATION RATES FOR SITES HAVING DISTURBED AREAS OVER 5 ACRES.

B. SOIL AMENDMENTS (FERTILIZER AND LIME SPECIFICATIONS)

I. SOIL TESTS MUST BE PERFORMED TO DETERMINE THE EXACT RATIONS AND APPLICATION RATES FOR BOTH LIME AND FERTILIZER ON SITES HAVING DISTURBED AREAS OVER 5 ACRES. SOIL ANALYSIS MAY BE PERFORMED BY THE UNIVERSITY OF THE DISTRICT OF COLUMBIA OR A CERTIFIED COMMERCIAL LABORATORY. SOIL SAMPLES TAKEN FOR ENGINEERING PURPOSES MAY ALSO BE USED FOR CHEMICAL ANALYSES.

II. FERTILIZERS SHALL BE UNIFORM IN COMPOSITION, FREE FLOWING AND SUITABLE FOR ACCURATE APPLICATION AND APPROVED EQUIPMENT. MANURE MAY BE SUBSTITUTED FOR FERTILIZER WITH PRIOR APPROVAL FROM THE APPROPRIATE APPROVAL AUTHORITY. FERTILIZERS SHALL ALL BE DELIVERED TO THE SITE FULLY LABELED ACCORDING TO THE APPLICABLE STATE FERTILIZED LAWS AND SHALL BEAR THE NAME OR TRADEMARK, AND WARRANTEE OF THE PRODUCER.

III. LIME MATERIALS SHALL BE GROUND LIMESTONE (HYDRATED OR BURNT LIME MAY BE SUBSTITUTED) WHICH CONTAINS AT LEAST 50% TOTAL U(DES (CALCIUM OXIDE PLUS MAGNESIUM OXIDE). LIMESTONE SHALL BE GROUND 94 SUCH FINENESS THAT AT LEAST 60% WILL PASS THROUGH #100 MESH SIEVE AND 96–100% WILL PASS THROUGH A #20 SIEVE.

IV. 9JCORPORATE LIME AND FERTILIZER INTO THE TOP 3–5" OF SOIL BY DISKING OR OTHER SUITABLE MEANS.

C. SEEDBED PREPARATION

I. TEMPORARY SEEDING

A. SEEDBED PREPARATION SHALL CONSIST OF LOOSENING SOIL TO A DEPTH OF 3" TO 5" BY MEANS OF SUITABLE AGRICULTURAL OR CONSTRUCTION EQUIPMENT, SUCH AS DISC HARROWS OR CHISEL PLOWS OR RIPPERS MOUNTED ON THE CONSTRUCTION EQUIPMENT. AFTER THE SOIL IS LOOSENED, IT SHOULD NOT BE ROLLED OR DRAGGED SMOOTH, BUT LEFT DI THE ROUGHENED CONDITION. SLOPED AREAS (GREATER 3:1) SHOULD BE TRACKED LEAVING THE SURFACE DI AN IRREGULAR CONDITION WTH RIDGES RUNNING PARALLEL TO THE CONTOUR OF THE SLOPE

B. APPLY FERTILIZER AND LIME AS PRESCRIBED ON THE PLANS.

C. INCORPORATE LIME AND FERTILIZER INTO THE TOP 3–5" OF SOIL BY DISKING OR OTHER SUITABLE MEANS.

II. PERMANENT SEEDING

A. MINIMUM SOIL CONDITIONS REQUIRED FOR PERMANENT VEGETATIVE ESTABLISHMENT:

1. SOIL PH SHALL BE BETWEEN 6.9 AND 7.0

2. SOLUBLE SALTS SHALL BE LESS THAN 500 PARTS PER MILLION (PPM).

3. THE SOIL SHALL CONTAIN LESS THAN 49% CLAY BUT ENOUGH FINE GRAINED MATERIAL (>30% SILT PLUS CLAY) TO PROVIDE THE CAPACITY TO HOLD A MODERATE AMOUNT OF MOISTURE AN EXCEPTION IS FL LOVEGRASS OR SERECIA LESPEDEZA IS TO BE PLANTED, THAN A SANDY SOIL (L30% SILT PLUS CLAY) WOULD BE ACCEPTABLE

4. SOIL SHALL CONTAIN 1.5% MINIMUM ORGANIC MATTER BY WEIGHT.

5. SOIL MUST CONTAIN SUFFICIENT PORE SPACE TO PERMIT ADEQUATE ROOT PENETRATION. 6. ff THESE CONDITIONS CANNOT BE MET BY SOILS ON–SITE, ADDING TOPSOIL IS REQUIRED W ACCORDANCE WTH SECTION 38, STANDARD AND SPECIFICATION FOR TOPSOIL.

B. AREAS PREVIOUSLY GRADED IN CONFORMANCE WITH THE DRAWINGS SHALL BE MAINTAINED IN A TRUE AND EVEN GRADE, THEN SCARFED OR OTHERWISE LOOSENED TO A DEPTH OF 3–5" TO PERMIT BONDING OF THE TOPSOIL TO A SURFACE AREA AND TO CREATE HORIZONTAL EROSION CHECK SLOTS TO PREVENT TOPSOIL FROM SLIDING DOWN A SLOPE

C. APPLY SOIL AMENDMENTS AS PER SOIL TEST OR AS INCLUDED ON THE PLANS. D. MIX SOIL AMENDMENTS INTO THE TOP 3–5" OF TOPSOIL BY DISKING OR OTHER SUITABLE MEANS. LAWN AREAS SHOULD BE RAKED TO SMOOTH THE SURFACE, REMOVE LARGE OBJECTS LIKE STONES AND BRANCHES, AND READY THE AREA FOR SEED APPLICATION. WHERE SITE CONDITIONS MILIE NOT PERMIT NORMAL SEEDBED PREPARATION, LOOSEN THE SURFACE SOIL BY DRAGGING WTH A HEAVY CHAIN OR OTHER EQUIPMENT TO ROUGHEN THE SURFACE STEEP SLOPES (STEEPER THAN 3:1) SHOULD BE TRACKED BY A DOZIER LEAVING THE SOIL IN AN IRREGULAR CONDITION WTH RIDGES RUNNING PARALLEL TO THE CONTOUR OF THE SLOPE THE TOP 1–3" OF SOIL SHOULD BE LOOSE AND FRIABLE SEEDBED LOOSENING MAY NOT BE NECESSARY ON NEWLY DISTURBED AREAS.

D. SEED SPECIFICATIONS

I. ALL SEED MUST MEET THE REQUIREMENTS OF THE DISTRICT OF COLUMBIA DPW STANDARD AND SPECIFICATIONS FOR HIGHWAYS AND STRUCTURES AND SPECIFICATION 42.0 VEGETATIVE STABILIZATION. ALL SEED USED SHALL HAVE BEEN TESTED WTH THE 6 MONTHS IMMEDIATELY PRECEDING THE DATE OF SOWING SUCH MATERIAL ON THIS JOB.

NOTE: SEED TAGS SHALL BE MADE AVAILABLE TO THE INSPECTOR TO VERIFY TYPE AND RATE OF SEED USED.

II. INOCULANT – THE INOCULANT FOR TREATING LEGUME SEED 94 THE SEED MIXTURES SHALL BE A PURE CULTURE OF NITROGEN–FIXING BACTERIA PREPARED SPECIFICALLY FOR THE SPECIMES. INOCULANTS SHALL NOT BE USED LATER THAN THE DATE INDICATED ON THE CONTAINER. ADD FRESH INOCULANT AS DIRECTED ON THE PACKAGE. USE FOUR TIMES THE RECOMMENDED RATE WTH HYDROSEEDING. NOTE: IT IS VERY IMPORTANT TO KEEP INOCULANT AS COOL AS POSSIBLE UNTIL USED. TEMPERATURES ABOVE 75–89F CAN WEAKEN BACTERIA AND MAKE THE INOCULANT LESS EFFECTIVE.

E. METHODS OF SEEDING: APPLY SEED UNIFORMLY WITH HYDROSEEDER (SLURRY INCLUDES SEED AND FERTILIZER). BROADCAST OR DROP SEEDIER, OR A CULTIPACKER SEEDIER.

I. HYDROSEEDING:

A. IF FERTILIZER IS BEING APPLIED AT THE TIME OF SEEDING, THE APPLICATIONS RATES AMOUNTS WILL NOT EXCEED THE FOLLOWING NITROGEN: MAXIMUM OF 100 LEIS PER ACRE TOTAL OF SOLUBLE NITROGEN: P205 (PHOSPHOROUS): 20BLBS/AC; K20 (POTASSIUM): 200 LBS/AC.

B. LIME – USE ONLY GROUND AGRICULTURAL LIMESTONE (UP TO 3 TONS PER ACRE MAY BE APPLIED BY HYDROSEEDING). NORMALLY: NOT MORE THAN 2 TONS ARE APPLIED BY HYDROSEEDING AT ANY ONE TIME DO NOT USE BURNT OR HYDRATED LIME WHEN HYDROSEEDING.

C. SEED AND FERTILIZER SHALL BE MIXED ON–SITE AND SEEDING SHALL BE DONE IMMEDIATELY AND WITHOUT INTERRUPTION.

42.0 STANDARDS AND SPECIFICATIONS FOR VEGETATIVE STABILIZATION CONT.

II. DRY SEEDING: THIS INCLUDES USE OF CONVENTIONAL DROP OR BROADCAST SPREADERS.

A. SEE SPREAD DRY SHALL BE INCORPORATED INTO THE SUBSOIL AT THE RATES PRESCRIBED ON THE TEMPORARY OR PERMANENT SEm9JG SUMMARIES OR TABLES 42 OR 43. THE SEED AREA SHALL THEN BE ROLLED WITH A WEIGHTED ROLLER TO PROVIDE GOOD SEED TO SOIL CONTACT.

B. WHERE PRACTICAL, SEED SHOULD BE APPLIED IN TWO DIRECTIONS PERPENDICULAR TO EACH OTHER. APPLY HALF THE SEEDING RATE IN EACH DIRECTION.

III. DRILL OR CULTIPACKER SEEDING: MECHANIZED SEEDERS THAT APPLY AND COVER SEED WITH SOIL.

A. CULTIPACKING SEEDERS ARE REQUIRED TO BURY THE SEED IS SUCH A SFASHION AS TO PROVIDE AT LEAST 1–INCH OF SOIL COVERING. SEEDBED MUST BE FIRM AFTER PLANTING. B. WHERE PRACTICAL, SEED SHOULD BE APPLIED IN TWO DIRECTIONS PERPENDICULAR TO EACH OTHER. APPLY HALF THE SEEDING RATE IN EACH DIRECTION.

F. MULCH SPECIFICATIONS (IN ORDER OF PREFERENCE)

I. STRAW SHALL CONSIST OF THOROUGHLY THRESHED WHEAT, RYE, OR OAT STRAW, REASONABLY BRIGHT W COLOR, AND SHALL NOT BE MUSTY, MOLDY, CAKED, DECAYED, OR EXCESSIVELY DUSTY AND SHALL BE FREE OF NOXIOUS WEED SEEDS AS SPECIFIED BY THE NRCS SEED LAW.

NOTE: ONLY STERILE STRAW MULCH SHOULD BE USED IN AREAS WHERE ONE SPECIES OF GRASS IS DESIRED.

II. WOOD CELLULOSE FIBER MULCH (WCFM)

A. WCFM SHALL CONSIST OF SPECIALLY PREPARED WOOD CELLULOSE PROCESSED INTO A UNIFORM FIBROUS PHYSICAL STATE.

B. WCFM SHALL BE DYED GREEN OR CONTAIN A GREEN DYE 1N THE PACKAGE THAT WILL PROVIDE AN APPROPRIATE COLOR TO FACILITATE VISUAL INSPECTION OF THE UNIFORMLY SPREAD SLURRY.

C. WCFM, INCLUDING DYE, SHALL CONTAIN NO GERMINATION OR GROWTH INHIBITMG FACTORS.

D. WCFM MATERIALS SHALL BE MANUFACTURED AND PROCESSED IN SUCH A MANNER THAT THE WOOD CELLULOSE FIBER MULCH WILL REMAIN 94 UNIFORM SUSPENSION 94 WATER UNDER AGITATION AND WILL BLENCH WITH 5% FERTILDER AND OTHER ADDITIVES TO FORM A HOMOGENOUS SLURRY. THE MULCH MATERIAL SHALL FORM A BLOTTER–LIKE GROUND COVER, ON APPLICATION, HAVING MOISTURE ABSORPTION AND PERCOLATION PROPERTIES AND SHALL COVER AND HOLD GRASS SEED W CONTACT WITH THE SOIL WITHOUT INHIBITING THE GROWTH OF THE GRASS SEEDLINGS.

E. WCFM MATERIAL SHALL CONTAIN NO ELEMENTS OR COMPOUNDS AT CONCENTRATION LEVELS THAT WILL BE PHYTO–TOXIC.

F. WCFM MUST CONFORM TO THE FOLLOWING PHYSICAL REQUIREMENTS FIBER LENGTH APPROXIMATELY 16 MM., DIAMETER APPROXIMATELY 1 MM., PH RANGE OF 4.6 TO &5, ASH CONTENT OF 1.6X MAXIMUM, AND WATER HOLDING CAPACITY OF 98%E MINIMUM.

G. MULCHING SEEDED AREAS – MULCH SHALL BE APPLIED TO ALL SEEDED AREAS IMMEDIATELY AFTER SING.

I. IF GRADING IS COMPLETED OUTSIDE OF THE SEEDING SEASON, MULCH ALONE SHALL BE APPLIED AS PRESCRIBED 1N THIS SECTION AND MAINTAINED UNTIL THE S49IG SEASON RETURNS AND SEEDING CAN BE PERFORMED ACCORDANCE WITH THESE SPECIFICATIONS.

II. WHEN STRAW MULCH IS USED, IT SHALL BE SPREAD OVER ALL SEEDED AREAS AT THE RATE OF 2 TONS/ACRE. MULCH SHALL BE APPLIED TO A UNIFORM LOOSE DEPTH SO THAT THE SOIL SURFACE IS NOT EXPOSED. IF A MULCH ANCHORING TOOL IS TO BE USED, THE RATE SHOULD BE INCREASED TO 25 TONS/ACRE

III. WOOD CELLULOSE FIBER USED AS A MULCH SHALL BE APPLIED AT A NET DRY WEIGHT OF 1,560 LBS. PER ACRE. THE WOOD CELLULOSE FIBER SHALL BE MIXED WITH WATER AND THE MIXTURE SHALL CONTAIN A MAXIMUM OF 50 L9& OF WOOD CELLULOSE FIBER PER 100 GALLONS OF WATER.

H. SECURING STRAW MULCH (MULCH ANCHORING): MULCH ANCHORING S

C5.02 Erosion and Sediment Control Details (common to both options)

DETAIL 1 - STABILIZED CONSTRUCTION ENTRANCE

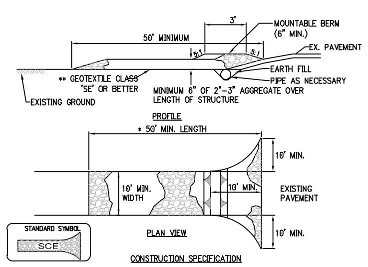

CONSTRUCTION SPECIFICATION

1. LENGTH – MINIMUM OF 50' (*30' FOR SINGLE RESIDENCE LOT).
2. WIDTH – 10' MINIMUM, SHOULD BE FLARED AT THE EXISTING ROAD TO PROVIDE A TURNING RADIUS.
3. GEOTEXTILE FABRIC (FILTER CLOTH) SHALL BE PLACED OVER THE EXISTING GROUND PRIOR TO PLACING STONE. ** THE PLAN APPROVAL AUTHORITY MAY NOT REQUIRE SINGLE FAMILY RESIDENCES TO USE GEOTEXTILE.
4. STONE – CRUSHED AGGREGATE (2" TO 3") OR RECLAIMED OR RECYCLED CONCRETE EQUIVALENT SHALL BE PLACED AT LEAST 6" DEEP OVER THE LENGTH AND WIDTH OF THE ENTRANCE.
5. SURFACE WATER – ALL SURFACE WATER FLOWING TO OR DIVERTED TOWARD CONSTRUCTION ENTRANCES SHALL BE PIPED THROUGH THE ENTRANCE, MAINTAINING POSITIVE DRAINAGE. PIPE INSTALLED THROUGH THE STABILIZED CONSTRUCTION ENTRANCE SHALL BE PROTECTED WITH A MOUNTABLE BERM WITH 5:1 SLOPES AND A MINIMUM OF 6" STONE OVER THE PIPE. WHEN THE SCE IS LOCATED AT A HIGH SPOT AND HAS NO DRAINAGE TO CONVEY A PIPE WILL NOT BE NECESSARY. PIPE SHOULD BE SIZED ACCORDING TO THE AMOUNT OF RUNOFF TO CONVEYED. A 6" MINIMUM WILL BE REQUIRED. THE MOUNTABLE BERM IS REQUIRED ON ALL SCEs NOT LOCATED AT A HIGH SPOT.
6. LOCATION – A STABILIZED CONSTRUCTION ENTRANCE SHALL BE LOCATED AT EVERY POINT WHERE CONSTRUCTION TRAFFIC ENTERS OR LEAVES A CONSTRUCTION SITE. VEHICLES LEAVING THE SITE MUST TRAVEL OVER THE ENTIRE LENGTH OF THE STABILIZED CONSTRUCTION ENTRANCE.

U.S. DEPARTMENT OF AGRICULTURE NATURAL RESOURCE CONSERVATION SERVICE	PAGE A-1-3	WATERSHED PROTECTION DIVISION DISTRICT OF COLUMBIA DEPARTMENT OF HEALTH

DETAIL 4 - SILT FENCE

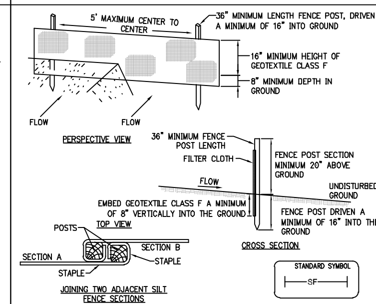

CONSTRUCTION SPECIFICATIONS

1. FENCE POSTS SHALL BE A MINIMUM OF 36" LONG DRIVEN 16' MINIMUM INTO THE GROUND. WOOD POSTS SHALL BE 1 1/2" x 1 1/2" SQUARE (MIN.) CUT, OR 1 3/4" DIAMETER (MIN.) ROUND AND SHALL BE OF SOUND QUALITY HARDWOOD. STEEL POSTS WILL BE STANDARD T OR U SECTION WEIGHTING NOT LESS THAN 1.00 POUND PER LINEAR FOOT.

2. GEOTEXTILE SHALL BE FASTENED SECURELY TO EACH FENCE POST WITH WIRE TIES OR STAPLES AT TOP AND MID-SECTION AND SHALL MEET THE FOLLOWING REQUIREMENTS FOR GEOTEXTILE CLASS F.

TENSILE STRENGTH	50 LBS/IN (MIN.)	TEST: ASTM D-4595
TENSILE MODULUS	20 LBS/IN (MIN.)	TEST: ASTM D-4595
FLOW RATE	0.3 GAL/FT2/MINUTE (MAX.)	TEST: ASTM D-5141
FILTERING EFFICIENCY	75% (MIN.)	TEST: ASTM D-5141

3. WHERE ENDS OF GEOTEXTILE FABRIC COME TOGETHER, THEY SHALL BE OVERLAPPED, FOLDED AND STAPLED TO PREVENT SEDIMENT BYPASS.

4. SILT FENCE SHALL BE INSPECTED AFTER EACH RAINFALL EVENT AND MAINTAINED WHEN BULGES OCCUR OR WHEN SEDIMENT ACCUMULATION REACHED 30% OF THE FABRIC HEIGHT.

U.S. DEPARTMENT OF AGRICULTURE NATURAL RESOURCE CONSERVATION SERVICE	PAGE B-5-3	WATERSHED PROTECTION DIVISION DISTRICT OF COLUMBIA DEPARTMENT OF HEALTH

DETAIL 6A - STANDARD INLET PROTECTION

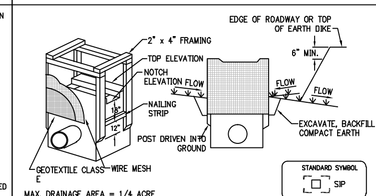

MAX. DRAINAGE AREA = 1/4 ACRE

CONSTRUCTION SPECIFICATIONS

1. EXCAVATE COMPLETELY AROUND THE INLET TO A DEPTH OF 18" BELOW THE NOTCH ELEVATION.

2. DRIVE THE 2' x 4' CONSTRUCTION GRADE LUMBER POSTS 1' INTO THE GROUND AT EACH CORNER OF THE INLET. PLACE NAIL STRIPS BETWEEN THE POSTS ON THE ENDS OF THE INLET. ASSEMBLE THE TOP PORTION OF THE 2' x 4' FRAME USING THE OVERLAP JOINT SHOWN ON DETAIL 6A. THE TOP OF THE FRAME (WEIR) MUST BE 6" BELOW ADJACENT ROADWAYS WHERE FLOODING AND SAFETY ISSUES MAY ARISE.

3. STRETCH THE 1/2" x 1/2" WIRE MESH TIGHTLY AROUND THE FRAME AND FASTEN SECURELY. THE ENDS MUST MEET AND OVERLAP AT A POST.

4. STRETCH THE GEOTEXTILE CLASS E TIGHTLY OVER THE WIRE MESH WITH THE GEOTEXTILE EXTENDING FROM THE TOP OF THE FRAME TO 18" BELOW THE INLET NOTCH ELEVATION. FASTEN THE GEOTEXTILE FIRMLY TO THE FRAME. THE ENDS OF THE GEOTEXTILE MUST MEET AT A POST, BE OVERLAPPED AND FOLDED THAN FASTENEND DOWN.

5. BACKFILL AROUND THE INLET IN COMPACTING 6" LAYERS UNTIL THE LAYER OF EARTH IS LEVEL WITH THE NOTCH ELEVATION ON THE ENDS AND TOP ELEVATION ON THE SIDES.

6. IF THE INLET IS NOT IN A SUMP, CONSTRUCT A COMPACTED EARTH DIKE ACROSS THE DITCH LINE DIRECTLY BELOW IT. THE TOP OF THE EARTH DIKE SHOULD BE AT LEAST 6" HIGHER THAN THE TOP OF THE FRAME.

7. THE STRUCTURE MUST BE INSPECTED PERIODICALLY AND AFTER EACH RAIN AND THE GEOTEXTILE REPLACED WHEN IT BECOMES CLOGGED.

U.S. DEPARTMENT OF AGRICULTURE NATURAL RESOURCE CONSERVATION SERVICE	PAGE B-7-5	WATERSHED PROTECTION DIVISION DISTRICT OF COLUMBIA DEPARTMENT OF HEALTH

DETAIL 6B - AT GRADE INLET PROTECTION

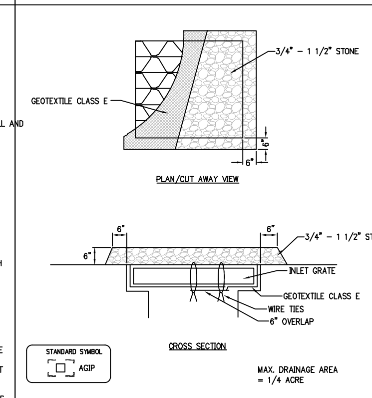

CONSTRUCTION SPECIFICATIONS

1. LIFT GRATE AND WRAP WITH GEOTEXTILE CLASS E TO COMPLETELY COVER ALL OPENINGS, THEN SET GRATE BACK IN PLACE.

2. PLACE 3/4" TO 1 1/2" STONE. 4"-6" THICK ON THE GRATE TO SECURE THE FABRIC AND PROVIDE ADDITIONAL FILTRATION.

U.S. DEPARTMENT OF AGRICULTURE NATURAL RESOURCE CONSERVATION SERVICE	PAGE B-7-6	WATERSHED PROTECTION DIVISION DISTRICT OF COLUMBIA DEPARTMENT OF HEALTH

DETAIL 6C - CURB INLET PROTECTION (COG OR COS INLETS)

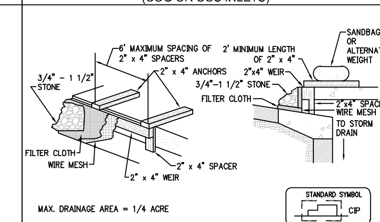

MAX. DRAINAGE AREA = 1/4 ACRE

CONSTRUCTION SPECIFICATIONS

1. ATTACH A CONTINOUS PIECE OF WIRE MESH (30" MINIMUM WIDTH BY THROAT LENGTH PLUS 4') TO THE 2" x 4" WEIR (MEASURING THROAT LENGTH PLUS 2') AS SHOWN ON THE STANDARD DRAWING.

2. PLACE A CONTINUOUS PIECE OF GEOTEXTILE CLASS E THE SAME DIMENSIONS AS THE WIRE MESH OVER THE WIRE MESH AND SECURELY ATTACH IT TO THE 2" x 4" WEIR.

3. SECURELY NAIL THE 2" x 4" WEIR TO A 9" LONG VERTICAL SPACER TO BE LOCATE BETWEEN THE WEIR AND THE INLET FACE (MAX. 4' APART).

4. PLACE THE ASSEMBLY AGAINST THE INLET THROAT AND NAIL (MINIMUM 2' LENGTHS OF 2" x 4" TO THE TOP OF THE WEIR AT SPACER LOCATIONS). THESE 2" x 4" ANCHORS SHALL EXTEND ACROSS THE INLET TOP AND BE HELD IN PLACE BY SANDBAGS OR ALTERNATE WEIGHT.

5. THE ASSEMBLY SHALL BE PLACE SO THAT THE END SPACERS ARE A MINIMUM 1' BEYOND BOTH ENDS OF THE THROAT OPENING.

6. FORM THE 1/2" x 1/2" WIRE MESH AND THE GEOTEXTILE FABRIC TO THE CONCRETE GUTTER AND AGAINST THE FACE OF THE CURB ON BOTH SIDES OF THE INLET. PLACE CLEAN 3/4" x 1 1/2" STONE OVER THE WIRE MESH AND GEOTEXTILE IN SUCH A MANNER TO PREVENT WATER FROM ENTERING THE INLET UNDER OR AROUND THE GEOTEXTILE.

7. THIS TYPE OF PROTECTION MUST BE INSPECTED FREQUENTLY AND THE FILTER CLOTH AND STONE REPLACED WHEN CLOGGED WITH SEDIMENT.

8. ASSURE THAT THE STORM FLOW DOES NOT BYPASS THE INLET BY INSTALLING A TEMPORARY EARTH OR ASPHALT DIKE TO DIRECT THE FLOW TO THE INLET.

U.S. DEPARTMENT OF AGRICULTURE NATURAL RESOURCE CONSERVATION SERVICE	PAGE B-7-7	WATERSHED PROTECTION DIVISION DISTRICT OF COLUMBIA DEPARTMENT OF HEALTH

DETAIL 22 - SEDIMENT BASIN/TRAP BAFFLES

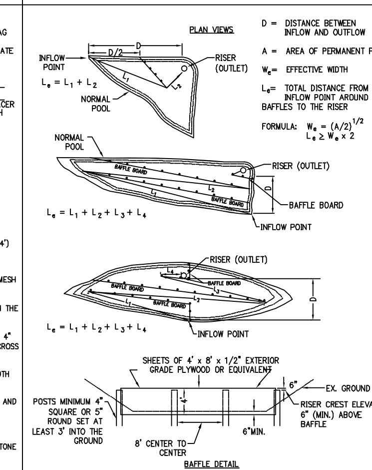

U.S. DEPARTMENT OF AGRICULTURE NATURAL RESOURCE CONSERVATION SERVICE	PAGE D-15-32	WATERSHED PROTECTION DIVISION DISTRICT OF COLUMBIA DEPARTMENT OF HEALTH

DETAIL 74 - TREE PROTECTION

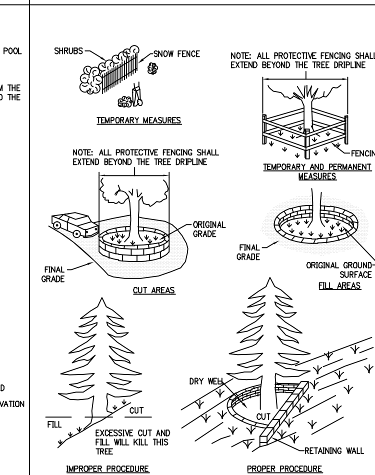

U.S. DEPARTMENT OF AGRICULTURE NATURAL RESOURCE CONSERVATION SERVICE	PAGE K-43-3	WATERSHED PROTECTION DIVISION DISTRICT OF COLUMBIA DEPARTMENT OF HEALTH

DETAIL 6D - MEDIAN INLET PROTECTION

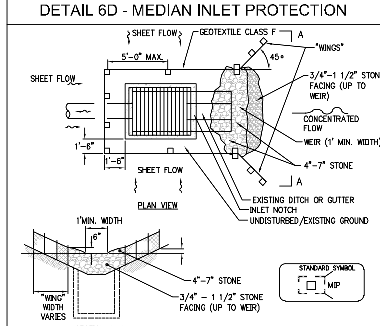

CONSTRUCTION SPECIFICATIONS

1. FENCE POSTS SHALL BE 36" (MIN.) LONG. DRIVEN 16" INTO THE GROUND AND SPACED 5' (MAX.) APART. WOOD POSTS SHALL BE 1 1/2" x 1 1/2" (MIN.) SQUARE CUT OR 1 3/4" (MIN.) DIAMETER ROUND AND SHALL BE OF SOUND QUALITY HARDWOOD. STEEL POSTS SHALL BE STANDARD T OR U SECTION WEIGHING NOT LESS THAN 1.0 #/LINEAR FOOT.

2. GEOTEXTILE CLASS F SHALL BE FASTENED SECURELY TO EACH POST WITH WIRE TIES OR STAPLES AT TOP AND MID-SECTION.

3. WHERE ENDS OF GEOTEXTILE FABRIC COME TOGETHER THEY SHALL BE OVERLAPPED, FOLDED AND STAPLED.

4. MEDIAN INLET PROTECTION SHALL BE INSPECTED AFTER EACH RAIN AND MAINTAINED WHEN BULGES OCCUR IN THE FABRIC OR WHEN THE STONE GETS CLOGGED.

5. STONE USED TO CONSTRUCT THE WEIR SHALL BE 4"-7" WITH A 1' THICK LAYER OF 3/4"-1 1/2" STONE ON THE UPSTREAM FACE.

U.S. DEPARTMENT OF AGRICULTURE NATURAL RESOURCE CONSERVATION SERVICE	PAGE B-7-8	WATERSHED PROTECTION DIVISION DISTRICT OF COLUMBIA DEPARTMENT OF HEALTH

DETAIL 6E - AT GRADE INLET GUARD

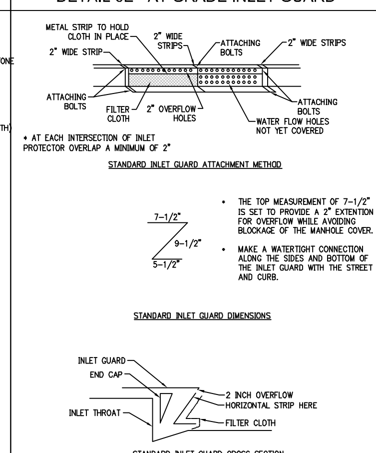

U.S. DEPARTMENT OF AGRICULTURE NATURAL RESOURCE CONSERVATION SERVICE	PAGE B-7-9	WATERSHED PROTECTION DIVISION DISTRICT OF COLUMBIA DEPARTMENT OF HEALTH

DETAIL 9 - EARTH DIKE

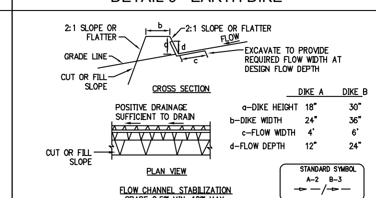

1. SEED AND COVER WITH STRAW MULCH.
2. SEED AND COVER WITH SOIL STABILIZATION MATTING OR LINE WITH SOD.
3. 4"-7" STONE OR RECYCLED CONCRETE EQUIVALENT PRESSED INTO THE SOIL 7" MINIMUM.

CONSTRUCTION SPECIFICATIONS

1. ALL TEMPORARY EARTH DIKES SHALL HAVE UNINTERRUPTED POSITIVE GRADE TO AN OUTLET. SPOT ELEVATIONS MAY BE NECESSARY FOR GRADES LESS THAN 1%.

2. RUNOFF DIVERTED FROM A DISTURBED AREA SHALL BE CONVEYED TO A SEDIMENT TRAPPING DEVICE.

3. RUNOFF DIVERTED FROM AN UNDISTURBED AREA SHALL OUTLET DIRECTLY INTO AN UNDISTURBED, STABILIZED AREA AT A NON-EROSIVE VELOCITY.

4. ALL TREES, BRUSH, STAMPS, OBSTRUCTIONS, AND OTHER OBJECTIONABLE MATERIAL SHALL BE REMOVED AND DISPOSED OF SO AS NOT TO INTERFERE WITH THE PROPER FUNCTIONING OF THE DIKE.

5. THE DIKE SHALL BE EXCAVATED OR SHAPED TO LINE, GRADE AND CROSS SECTION AS REQUIRED TO MEET THE CRITERIA SPECIFIED HEREIN AND BE FREE OF BANK PROJECTIONS OR OTHER IRREGULARITIES WHICH WILL IMPEDE NORMAL FLOW.

6. FILL SHALL BE COMPACTED BY EARTH MOVING EQUIPMENT.

7. ALL EARTH REMOVED AND NOT NEEDED FOR CONSTRUCTION SHALL BE PLACED SO THAT IT WILL NOT INTERFERE WITH THE FUNCTIONING OF THE DIKE.

8. INSPECTION AND MAINTENANCE MUST BE PROVIDED PERIODICALLY AND AFTER EACH RAIN EVENT.

U.S. DEPARTMENT OF AGRICULTURE NATURAL RESOURCE CONSERVATION SERVICE	PAGE C-10-6	WATERSHED PROTECTION DIVISION DISTRICT OF COLUMBIA DEPARTMENT OF HEALTH

DETAIL 11 - PERIMETER DIKE / SWALE

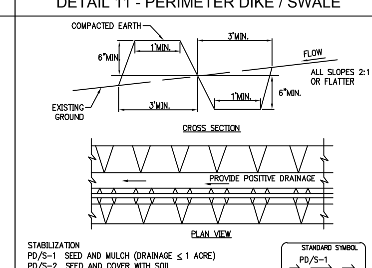

STABILIZATION
PD/S-1 SEED AND MULCH (DRAINAGE ≤ 1 ACRE)
PD/S-2 SEED AND COVER WITH SOIL STABILIZATION MATTING OR LINE WITH SOD (DRAINAGE BETWEEN 1 AND 2 ACRES)

CONSTRUCTION SPECIFICATIONS

1. ALL PERIMETER DIKE/SWALES SHALL HAVE AN UNINTERRUPTED POSITIVE GRADE TO AN OUTLET. SPOT ELEVATIONS MAY BE NECESSARY FOR GRADES LESS THAN 1%.

2. RUNOFF DIVERTED FROM A DISTURBED AREA SHALL BE CONVEYED TO A SEDIMENT TRAPPING DEVICE.

3. RUNOFF DIVERTED FROM AN UNDISTURBED AREA SHALL OUTLET INTO AN UNDISTURBED STABILIZED AREA AT A NON-EROSIVE VELOCITY.

4. THE SWALE SHALL BE EXCAVATED OR SHAPED TO LINE, GRADE, AND CROSS-SECTION AS REQUIRED TO MEET THE CRITERIA SPECIFIED IN THE STANDARD.

5. FILL SHALL BE COMPACTED BY EARTH MOVING EQUIPMENT.

6. STABILIZATION WITH SEED AND MULCH OR AS SPECIFIED OF THE AREA DISTURBED BY THE DIKE AND SWALE SHALL BE COMPLETED WITHIN 7 DAYS UPON REMOVAL.

7. INSPECTION AND REQUIRED MAINTENANCE SHALL BE PROVIDED AFTER EACH RAIN EVENT.

NOTE: THE MAXIMUM DRAINAGE FOR THIS PRACTICE IS 2 ACRES.

U.S. DEPARTMENT OF AGRICULTURE NATURAL RESOURCE CONSERVATION SERVICE	PAGE C-12-4	WATERSHED PROTECTION DIVISION DISTRICT OF COLUMBIA DEPARTMENT OF HEALTH

DETAIL 12 - PIPE OUTLET SEDIMENT TRAP - ST I

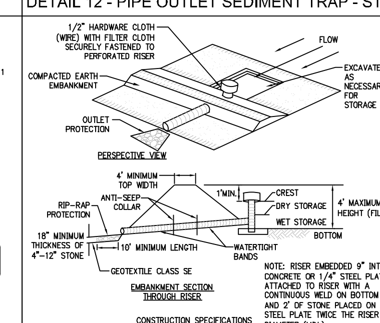

CONSTRUCTION SPECIFICATIONS

1. THE AREA UNDER THE EMBANKMENT SHALL BE CLEARED, GRUBBED AND STRIPPED OF ANY VEGETATION AND ROOT MAT. THE POOL AREA SHALL BE CLEARED.

2. THE FILL MATERIAL FOR THE EMBANKMENT SHALL BE FREE OF ROOTS OR OTHER WOODY VEGETATION AS WELL AS OVERSIZED STONES, ROCKS, ORGANIC MATERIAL, OR OTHER OBJECTIONABLE MATERIAL. THE EMBANKMENT SHALL BE COMPACTED BY TRAVERSING WITH EQUIPMENT WHILE IT IS BEING CONSTRUCTED.

3. THE TOTAL VOLUME AS MEASURED FROM THE BOTTOM TO RISER CREST ELEVATION SHALL BE 3600 CUBIC FEET PER ACRE OF DRAINAGE AREA (SEE TABLE 11). THE TOP OF EMBANKMENT MUST BE ≥ 1' ABOVE THE RISER CREST ELEVATION.

4. SEDIMENT SHALL BE REMOVED AND THE TRAP RESTORED TO ITS ORIGINAL DIMENSIONS WHEN THE SEDIMENT HAS ACCUMULATED TO ONE HALF OF THE WET STORAGE DEPTH OF THE TRAP (900 CF/AC). THE SEDIMENT SHALL BE DEPOSITED IN A SUITABLE AREA AND IN SUCH A MANNER THAT IT WILL NOT ERODE.

5. THE STRUCTURE SHALL BE INSPECTED PERIODICALLY AND AFTER EACH RAIN AND REPAIRS.

U.S. DEPARTMENT OF AGRICULTURE NATURAL RESOURCE CONSERVATION SERVICE	PAGE D-14-7	WATERSHED PROTECTION DIVISION DISTRICT OF COLUMBIA DEPARTMENT OF HEALTH

DETAIL 34 - PORTABLE SEDIMENT TANK (HORIZONTAL)

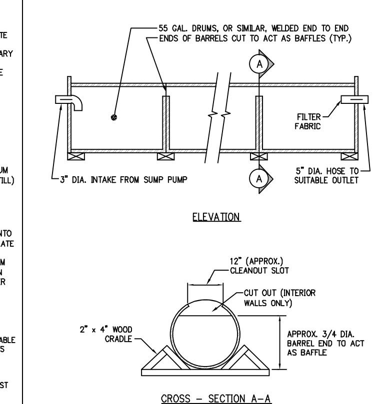

SOURCE: USDA – SCS

U.S. DEPARTMENT OF AGRICULTURE NATURAL RESOURCE CONSERVATION SERVICE	PAGE G-26-3	WATERSHED PROTECTION DIVISION DISTRICT OF COLUMBIA DEPARTMENT OF HEALTH

PIPE OUTLET SEDIMENT TRAP - ST I

6. CONSTRUCTION OPERATIONS SHALL BE CARRIED CUT IN SUCH A MANNER THAT EROSION AND WATER POLLUTION ARE ABATED. ONCE CONSTRUCTED, THE TOP AND OUTSIDE FACE OF THE EMBANKMENT SHALL BE STABILIZED WITH SEED AND MULCH. POINTS OF CONCENTRATED INFLOW SHALL BE PROTECTED IN ACCORDANCE WITH GRADE STABILIZATION STRUCTURE CRITERIA. THE REMAINDER OF THE INTERIOR SLOPES SHOULD BE STABILIZED (ONE TIME) WITH SEED AND MULCH UPON TRAP COMPLETION AND MONITORED AND MAINTAINED EROSION FREE USING THE LIFE OF THE TRAP.

7. THE STRUCTURE SHALL BE REMOVED AND AREA STABLIZED WHEN THE DRAINAGE AREA HAS BEEN PROPERLY STABILIZED.

8. ALL CUT AND FILL SLOPES SHALL BE 2:1 OR FLATTER.

9. ALL PIPE CONNECTIONS SHALL BE WATERTIGHT.

10. ABOVE THE WET STORAGE ELEVATION, THE RISER SHALL BE PERFORATED WITH 1/2" WIDE BY 6" LONG SLITS OR 1" DIAMETER HOLES SPACED 6" VERTICALLY AND HORIZONTALLY. NO PERFORATIONS WILL BE ALLOWED WITHIN 6" OF THE HORIZONTAL BARREL.

11. THE RISER SHALL BE WRAPPED WITH 1/2" HARDWARE CLOTH (WIRE) THEN WRAPPED WITH GEOTEXTILE CLASS E. THE FILTER CLOTH SHALL EXTEND 6" ABOVE THE HIGHEST SLIT AND 6" BELOW THE LOWEST SLIT. WHERE ENDS OF FILTER CLOTH COME TOGETHER, ,THEY SHALL BE OVERLAPPED, FOLDED AND FASTENED TO PREVENT BYPASS. FILTER CLOTH SHALL BE REPLACED AS NECESSARY TO PREVENT CLOGGING.

12. STRAPS OR CONNECTING BANDS SHALL BE USED TO HOLD THE FILTER CLOTH AND WIRE FABRIC IN PLACE. THEY SHALL BE PLACED AT THE TOP AND BOTTOM OF THE CLOTH.

13. FILL MATERIAL AROUND THE PIPE SPILLWAY SHALL BE HAND COMPACTED IN 4" LAYERS. A MINIMUM OF 2' OF HAND-COMPACTED BACKFILL SHALL BE PLACED OVER THE PIPE SPILLWAY BEFORE CROSSING IT WITH CONSTRUCTION EQUIPMENT.

14. THE RISER SHALL BE ANCHORED WITH EITHER A CONCRETE BASE OR STEEL PLATE BASE TO PREVENT FLOTATION. CONCRETE BASES SHALL BE AT LEAST TWICE THE RISER DIAMETER, 1/4" MINIMUM THICKNESS AND ATTACHED TO THE BOTTOM OF THE RISER BY A CONTINUOUS WELD TO FORM A WATERTIGHT CONNECTION. THEN PLACE 2' OF STONE, GRAVEL OR TAMPED EARTH ON THE PLATE.

15. ANTI SEEP COLLARS SHALL BE CONSTRUCTED IN ACCORDANCE WITH PLANS (REF. TABLE 18 AND DETAILS 17 AND 18).

U.S. DEPARTMENT OF AGRICULTURE NATURAL RESOURCE CONSERVATION SERVICE	PAGE D-14-8	WATERSHED PROTECTION DIVISION DISTRICT OF COLUMBIA DEPARTMENT OF HEALTH

DETAIL 13 - STONE OUTLET SEDIMENT TRAP - ST II

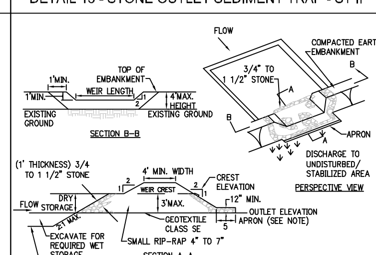

CONSTRUCTION SPECIFICATIONS

1. AREA UNDER EMBANKMENT SHALL BE CLEARED, GRUBBED AND STRIPPED OF ANY VEGETATION AND ROOT MAT. THE POOL AREA SHALL BE CLEARED.

2. THE FILL MATERIAL FOR THE EMBANKMENT SHALL BE FREE OF ROOTS AND OTHER WOODY VEGETATION AS WELL AS OVER-SIZED STONES, ROCKS, ORGANIC MATERIAL OR OTHER OBJECTIONABLE MATERIAL. THE EMBANKMENT SHALL BE COMPACTED BY TRAVERSING WITH EQUIPMENT WHILE IT IS BEING CONSTRUCTED.

3. ALL CUT AND FILL SLOPES SHALL BE 2:1 OR FLATTER.

4. THE STONE USED IN THE OUTLET SHALL BE SMALL RIP-RAP 4" TO 7" IN SIZE WITH A 1" THICK LAYER OF 3/4" TO 1 1/2" WASHED AGGREGATE PLACED ON THE UPSTREAM FACE OF THE OUTLET. STONE FACING SHALL BE AS NECESSARY TO PREVENT CLOGGING. GEOTEXTILE CLASS SE MAY BE SUBSTITUTED FOR THE STONE FACING BY PLACING IT ON THE INSIDE FACE OF THE STONE OUTLET.

5. SEDIMENT SHALL BE REMOVED AND TRAP RESTORED TO ITS ORIGINAL DIMENSIONS WHEN THE SEDIMENT HAS ACCUMULATED TO ONE HALF OF THE WET STORAGE DEPTH OF THE TRAP. REMOVED SEDIMENT SHALL BE DEPOSITED IN A SUITABLE AREA AND IN SUCH A MANNER THAT IT WILL NOT ERODE.

U.S. DEPARTMENT OF AGRICULTURE NATURAL RESOURCE CONSERVATION SERVICE	PAGE D-14-11	WATERSHED PROTECTION DIVISION DISTRICT OF COLUMBIA DEPARTMENT OF HEALTH

STONE OUTLET SEDIMENT TRAP - ST II

6. THE STRUCTURE SHALL BE INSPECTED PERIODICALLY AND AFTER EACH RAIN AND REPAIRS MADE AS NEEDED.

7. CONSTRUCTION OF TRAPS SHALL BE CARRIED OUT IN SUCH A MANNER THAT SEDIMENT POLLUTION IS ABATED. ONCE CONSTRUCTED, THE TOP AND OUTSIDE FACE OF THE EMBANKMENT SHALL BE STABILIZED WITH SEED AND MULCH. POINTS OF CONCENTRATION INFLOW SHALL BE PROTECTED IN ACCORDANCE WITH GRADE STABILIZATION STRUCTURE CRITERIA. THE REMAINDER OF THE INTERIOR SLOPES SHOULD BE STABILIZED (ONE TIME) WITH SEED AND MULCH UPON TRAP COMPLETION AND MONITORED AND MAINTAINED EROSION FREE DURING THE LIFE OF THE TOP.

8. THE STRUCTURE SHALL BE DEWATERED BY APPROVED METHODS. REMOVED AND THE AREA STABLIZED WHEN THE DRAINAGE AREA HAS BEEN PROPERLY STABILIZED.

9. REFER TO SECTION G FOR SPECIFICATIONS CONCERNING TRAP DEWATERING.

10. MINIMUM TRAP DEPTH SHALL BE MEASURED FROM THE WEIR ELEVATION.

11. THE ELEVATION OF THE TOP OF ANY DIKE DIRECTING WATER INTO THE TRAP MUST EQUAL OR EXCEED THE ELEVATION OF THE TRAP EMBANKMENT.

12. GEOTEXTILE CLASS SE SHALL BE PLACED OVER THE BOTTOM AND SIDES OF THE OUTLET CHANNEL PRIOR TO THE PLACEMENT OF STONE. SECTIONS OF FILTER CLOTH MUST OVERLAP AT LEAST 1' WITH THE SECTION NEAREST THE ENTRANCE PLACED ON TOP. THE FILTER CLOTH SHALL BE EMBEDDED AT LEAST 6" INTO EXISTING GROUND AT THE ENTRANCE OF THE OUTLET CHANNEL.

13. OUTLET – AN OUTLET SHALL BE PROVIDED, INCLUDING A MEANS OF CONVEYING THE DISCHARGE IN AN EROSION FREE MANNER TO AN EXISTING STABLE CHANNEL.

U.S. DEPARTMENT OF AGRICULTURE NATURAL RESOURCE CONSERVATION SERVICE	PAGE D-14-12	WATERSHED PROTECTION DIVISION DISTRICT OF COLUMBIA DEPARTMENT OF HEALTH

DETAIL 14 - RIP-RAP OUTLET SEDIMENT TRAP - ST III

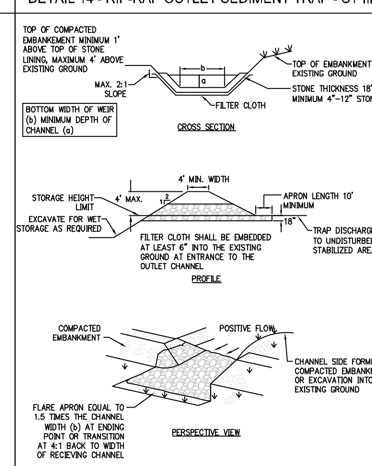

U.S. DEPARTMENT OF AGRICULTURE NATURAL RESOURCE CONSERVATION SERVICE	PAGE B-14-15	WATERSHED PROTECTION DIVISION DISTRICT OF COLUMBIA DEPARTMENT OF HEALTH

RIP-RAP OUTLET SEDIMENT TRAP - ST III

1. THE AREA UNDER EMBANKMENT SHALL BE CLEARED, GRUBBED AND STRIPPED OF ANY VEGETATION AND ROOT MAT. THE POOL AREA SHALL BE CLEARED.

2. THE FILL MATERIAL FOR THE EMBANKMENT SHALL BE FREE OF ROOTS OR OTHER WOODY VEGETATION AS WELL AS OVER-SIZED STONES, ROCKS, ORGANIC MATERIAL OR OTHER OBJECTIONABLE MATERIAL. THE EMBANKMENT SHALL BE COMPACTED BY TRAVERSING WITH EQUIPMENT WHILE IT IS BEING CONSTRUCTED. MAXIMUM HEIGHT OF EMBANKMENT SHALL BE 4', MEASURED AT CENTERLINE OF EMBANKMENT.

3. ALL CUT AND FILL SLOPES SHALL BE 2:1 OR FLATTER.

4. ELEVATION OF THE TOP OF ANY DIKE DIRECTING WATER INTO TRAP MUST EQUAL OR EXCEED THE HEIGHT OF TRAP EMBANKMENT.

5. STORAGE AREA PROVIDED SHALL BE FIGURED BY COMPUTING THE VOLUME MEASURED FROM TOP OF EXCAVATION. (FOR STORAGE REQUIREMENTS SEE TABLE 12).

6. FILTER CLOTH SHALL BE PLACED OVER THE BOTTOM AND SIDES OF THE OUTLET CHANNEL PRIOR TO PLACEMENT OF STONE. SECTION OF FABRIC MUST OVERLAP AT LEAST 1' WITH SECTION NEAREST THE ENTRANCE PLACED ON TOP. FABRIC SHALL BE EMBEDDED AT LEAST 6" INTO EXISTING GROUND AT ENTRANCE OF OUTLET CHANNEL.

7. STONE USED IN THE OUTLET CHANNEL SHALL BE 4" – 12" PLACED 18" THICK.

8. OUTLET – AN OUTLET SHALL BE PROVIDED, WHICH INCLUDES A MEANS OF CONVEYING THE DISCHARGE IN AN EROSION FREE MANNER TO AN EXISTING STABLE CHANNEL. PROTECTION AGAINST SCOUR AT THE DISCHARGE END SHALL BE PROVIDED AS NECESSARY.

9. OUTLET CHANNEL MUST HAVE POSITIVE DRAINAGE FROM THE TRAP.

10. SEDIMENT SHALL BE REMOVED AND TRAP RESTORED TO ITS ORIGINAL DIMENSIONS WHEN THE SEDIMENT HAS ACCUMULATED TO 1/4 OF THE WET STORAGE DEPTH OF THE TRAP (1350 cf/ac). REMOVED SEDIMENT SHALL BE DEPOSITED IN A SUITABLE AREA AND IN SUCH A MANNER THAT IT WILL NOT ERODE.

11. THE STRUCTURE SHALL BE INSPECTED PERIODICALLY AND AFTER EACH RAIN AND REPAIRED AS NEEDED.

12. CONSTRUCTION OF TRAPS SHALL BE CARRIED OUT IN SUCH A MANNER THAT SEDIMENT POLLUTION IS ABATED. ONCE CONSTRUCTED, THE TOP AND OUTSIDE FACE OF THE EMBANKMENT SHALL BE STABILIZED WITH SEED MULCH. POINTS OF CONCENTRATED INFLOW SHALL BE PROTECTED IN ACCORDANCE WITH GRADE STABILIZATION STRUCTURE CRITERIA. THE REMAINDER OF THE INTERIOR SLOPES SHOULD BE STABILIZED (ONE TIME) WITH SEED AND MULCH UPON TRAP COMPLETION AND MONITORED AND MAINTAINED EROSION FREE DURING THE LIFE OF THE TRAP.

13. THE STRUCTURE SHALL BE DEWATERED BY APPROVED METHODS, REMOVED AND THE AREA STABILIZED WHEN THE DRAINAGE AREA HAS BEEN PROPERLY STABILIZED.

U.S. DEPARTMENT OF AGRICULTURE NATURAL RESOURCE CONSERVATION SERVICE	PAGE B-14-16	WATERSHED PROTECTION DIVISION DISTRICT OF COLUMBIA DEPARTMENT OF HEALTH

DETAIL 35 - PORTABLE SEDIMENT TANK (VERTICAL)

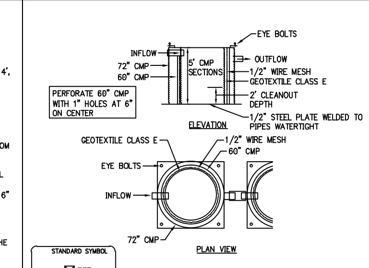

CONSTRUCTION SPECIFICATIONS

1. THE FOLLOWING FORMULA SHOULD BE USED IN DETERMINING THE STORAGE VOLUME OF THE SEDIMENT TANK: 1 CUBIC FOOT OF STORAGE FOR EACH GALLON PER MINUTE OF PUMP DISCHARGE CAPACITY.

2. AN EXAMPLE OF A TYPICAL SEDIMENT TANK IS SHOWN ABOVE. OTHER CONTAINER DESIGNS CAN BE USED IF THE STORAGE VOLUME IS ADEQUATE AND APPROVAL IS OBTAINED FROM THE LOCAL APPROVING AGENCY.

3. TANKS MAY BE CONNECTED IN SERIES.

U.S. DEPARTMENT OF AGRICULTURE NATURAL RESOURCE CONSERVATION SERVICE	PAGE G-26-4	WATERSHED PROTECTION DIVISION DISTRICT OF COLUMBIA DEPARTMENT OF HEALTH